Restriction orifice calculation

COPY COMPLIANT to the original document resident on the computer system at the time of printing

Index

1. Purpose & Scope 3

2. Calculation method 3

2.1. ISO 5167-2. 3

2.2. Idelchik's method.....6

3. Acceptance Criteria 10

3.1. ISO 5167-2. 10

3.2. Idelchik's method.....10

4. References 10

5. Appendix.....11

5.1. Calculation Tool.....11

5.2. Case study 23C047 – Item 086974.....12

COPY COMPLIANT to the original document resident on the computer system at the time of printing

1. PURPOSE & SCOPE

This procedure describes how to calculate the pressure drop across a restriction orifice.

This procedure is applicable to all the restriction orifices, which are installed in the piping.

This procedure applies to Nova Milanese and La Spezia plants.

2. CALCULATION METHOD

In the following chapters, the methods as per ISO 5167-2 and as per *I. E. Idelchik's Handbook of Hydraulic Resistance* are presented.

2.1. ISO 5167-2.

The flowrate and the pressure drop across the restriction orifice are estimated based on the *ISO 5167-2* Standard.

The discharge coefficient C is given by *Reader-Harris/Gallagher's equation* (ref. *ISO 5167-2 sect. 5.3.2.1*).

$$C = 0.5961 + 0.0261\beta^2 - 0.216\beta^8 + 0.000521\left(\frac{10^6\beta}{Re_D}\right)^{0.7} + (0.0188 + 0.0063A)\beta^{3.5}\left(\frac{10^6}{Re_D}\right)^{0.3} +$$

$$+ \left(0.043 + 0.80e^{-10L_1} - 0.123e^{-7L_1}\right)(1 - 0.11A)\frac{\beta^4}{1-\beta^4} - 0.031\left(M_2 - 0.8M_2^{1.1}\right)\beta^{1.3}$$

If D < 71.12mm (2.8 inch), the following term shall be added to the above reported equation:

$$+ 0.011(0.075 - \beta)\left(2.8 - \frac{D}{25.4}\right)$$

Where:

- β [-] is the ratio between the orifice diameter d and the pipe diameter D.
- Re_D [-] is the Reynolds number calculated on the pipe section.

COPY COMPLIANT to the original document resident on the computer system at the time of printing

- $L_1 = l_1/D$ [-] and $L_2^{'} = l_2/D$ [-] with l_1 the distance of the upstream tapping from the upstream face of the plate and l_2 the distance of the downstream tapping from the downstream face of the plate. The distances l_1 and l_2 are defined on the basis of the pressure tappings configuration:
  - Orifice plate with D and D/2 tappings or flange tappings, as per *Figure 3.1*. The data are the following:
    - a direction of flow.
    - $l_1 = D \pm 0.1D$.
    - $l_2 = 0.5D \pm 0.2D \; for \; \beta \leq 0.6$ or $0.5D \pm 0.1D \; for \; \beta > 0.6$.
    - $l_1 = l_2^{'} = (25.4 \pm 0.5)mm$ for $\beta > 0.6$ and $D < 150mm$ or $(25.4 \pm 1)mm$ for $\beta \leq 0.6$ or $(25.4 \pm 1)mm$ for $\beta > 0.6$ and $150mm \leq D < 1000mm$.

If the above requirements are met, it is possible to consider $L_1 = 1$ and $L_2^{'} = 0.47$ for D and D/2 tappings and $L_1 = L_2^{'} = 25.4/D$ for flange tappings.

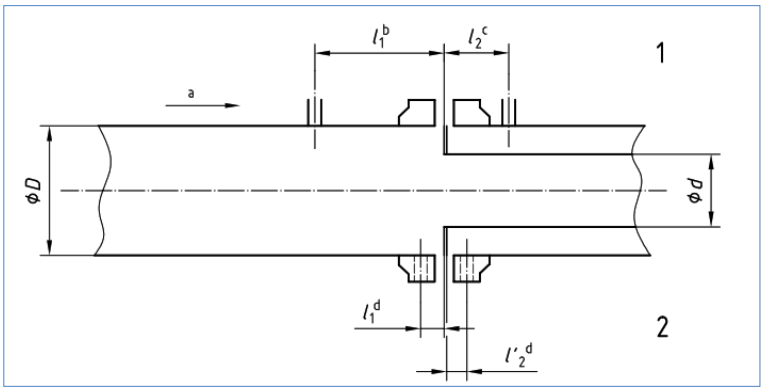

Figure 2.1: Spacing of pressure tappings for D and D/2 tappings (1) and flange tappings (2).

  - Orifice plate with corner tappings as in *Figure 3.2*. The pressure tappings may be either single tappings or annular slots. In this case, $L_1 = L_2^{'} = 0$.

COPY COMPLIANT to the original document resident on the computer system at the time of printing

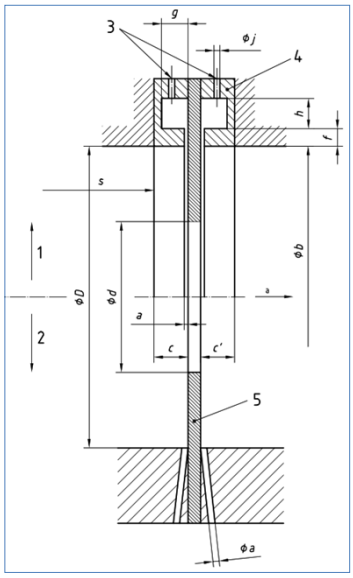

Figure 2.2: Corner tappings.

- M_2 and A are defined as in the following:

$$M_2 = \frac{2L_2}{1-\beta}$$

$$A = \left(\frac{19000\beta}{Re_D}\right)^{0.6}$$

In practice, the coefficients L_1, L_2 are usually equal to zero.

The pressure drop across the orifice is extracted from the following (ref. *ISO 5167-2 sect. 4*):

$$q_m = \frac{C}{\sqrt{1-\beta^4}}\varepsilon\frac{\pi}{4}d^2\sqrt{2\Delta p\,\rho_1}$$

Where $\mathbf{q_m}$ [kg/s] is the mass flowrate; ε [-] is the expansibility factor, whose effect is negligible (equal to 1) for the applicable cases of this procedure.

COPY COMPLIANT to the original document resident on the computer system at the time of printing

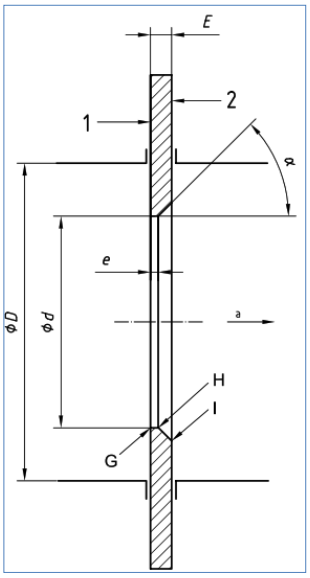

Figure 2.3: Typical restriction orifice plate.

2.2. *Idelchik's method*

The calculation is performed as per Chapter IV – Diagram 4.14 from *I. E. Idelchik's Handbook of Hydraulic Resistance* (refer to *Figure 3.44*).

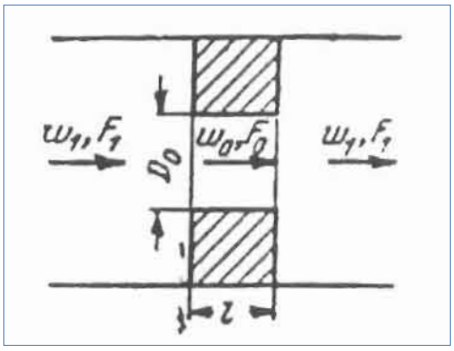

Figure 2.4: Reference picture from Chapter IV – Diagram 4.14 from I. E. Idelchik's Handbook.

In this case, the pressure drop is calculated as follows:

$$\Delta p = \frac{1}{2} \cdot \rho \cdot w_1^2 \cdot \zeta$$

Where:

- A_0 [m^2] and A_1 [m^2] are respectively the cross-section area of the piping and of the restriction orifice, D_0 [m] is the restriction orifice's diameter. If the section of the piping

COPY COMPLIANT to the original document resident on the computer system at the time of printing

and/or of the orifice is not circular, the equations are still valid using the hydraulic diameters.

- l [m] is the restriction orifice plate's thickness.
- Re [-] is the Reynold's number calculated in the cross section of the restriction orifice:

$$Re = \frac{w_0 \cdot D_0}{\nu}$$

- w_0 [m/s] and w_1 [m/s] are the fluid velocities respectively in the piping section and in the restriction orifice section.
- ε [m] is the surface roughness.
- λ [-] is the friction loss coefficient as per Moody's chart:
  - If $Re < 2000$:

$$\lambda = \frac{64}{Re}$$

  - If $Re > 2000$ (Colebrook's equation):

$$\frac{1}{\sqrt{\lambda}} = -2 \cdot \log\left(\frac{2.51}{Re \cdot \sqrt{\lambda}} + \frac{\varepsilon}{3.71 \cdot D_0}\right)$$

- ν [m^2/s] is the fluid kinematic viscosity.
- ρ [kg/m^3] is the fluid density.
- τ [-] is the coefficient calculated from the following tabulated data as per Chapter IV – Diagram 4.11 from *I. E. Idelchik's Handbook of Hydraulic Resistance*:
-

Table 2.1 Tabulated data for τ.

t/D	0.0	0.2	0.4	0.6	0.8	1.0	1.2	1.6	2.0	2.4
τ	1.35	1.22	1.10	0.84	0.42	0.24	0.16	0.07	0.02	0.00

COPY COMPLIANT to the original document resident on the computer system at the time of printing

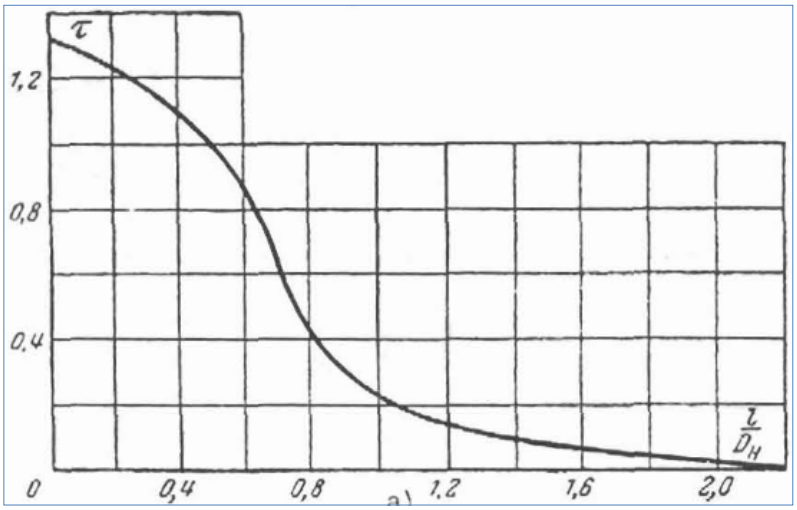

Figure 2.5: Chapter IV – Diagram 4.11 from I. E. Idelchik's Handbook of Hydraulic Resistance.

- ζ [-] I is the coefficient calculated as per Chapter IV – Diagram 4.14 from *I. E. Idelchik's Handbook of Hydraulic Resistance*:
  - If $Re = w_0 \cdot D_0/\nu > 10^5$:

$$\zeta = \left[\left(0.5 + \tau \cdot \sqrt{1 - \frac{A_0}{A_1}}\right) \cdot \left(1 - \frac{A_0}{A_1}\right) + \left(1 - \frac{A_0}{A_1}\right)^2 + \lambda \cdot \frac{l}{D_0}\right] \cdot \left(\frac{A_1}{A_0}\right)^2$$

  - If $Re = w_0 \cdot D_0/\nu < 10^5$ (approximately):

$$\zeta = \left(\zeta_\varphi + \varepsilon_0^{Re} \cdot \zeta_0 + \lambda \cdot \frac{l}{D_0}\right) \cdot \left(\frac{A_1}{A_0}\right)^2$$

- ζ_φ [-] and ε_0^{Re} [-] are the coefficient calculated from the following tabulated data as per Chapter IV – Diagram 4.10 from *I. E. Idelchik's Handbook of Hydraulic Resistance*:

Table 2.2: Tabulated data for ε_0^{Re}.

Re	25	40	60	100	200	400	10^3	$2 \cdot 10^3$	$4 \cdot 10^3$	10^4	$2 \cdot 10^4$	10^5	$2 \cdot 10^5$	10^6
ε_0^{Re}	0.34	0.36	0.37	0.4	0.42	0.46	0.53	0.59	0.64	0.74	0.81	0.94	0.96	0.98

COPY COMPLIANT to the original document resident on the computer system at the time of printing

Table 2.3: Tabulated data for ζ_{φ}.

ζ_{φ}														
A_0/A_1	Re													
	25	**40**	**60**	**100**	**200**	**400**	**10^3**	**$2\cdot10^3$**	**$4\cdot10^3$**	**10^4**	**$2\cdot10^4$**	**10^5**	**$2\cdot10^5$**	**10^6**
0	1.94	1.38	1.14	0.89	0.69	0.64	0.39	0.3	0.22	0.15	0.11	0.04	0.01	0
0.2	1.78	1.36	1.05	0.85	0.67	0.57	0.36	0.26	0.2	0.13	0.09	0.03	0.01	0
0.3	1.57	1.16	0.88	0.75	0.57	0.43	0.3	0.22	0.17	0.1	0.07	0.02	0.01	0
0.4	1.35	0.99	0.79	0.57	0.4	0.28	0.19	0.14	0.1	0.06	0.04	0.02	0.01	0
0.5	1.1	0.75	0.55	0.34	0.19	0.12	0.07	0.05	0.03	0.02	0.01	0.01	0.01	0
0.6	0.85	0.56	0.3	0.19	0.1	0.06	0.03	0.02	0.01	0.01	0	0	0	0
0.7	0.58	0.37	0.23	0.11	0.06	0.03	0.02	0.01	0	0	0	0	0	0
0.8	0.4	0.24	0.13	0.06	0.03	0.02	0.01	0	0	0	0	0	0	0
0.9	0.2	0.13	0.08	0.03	0.01	0	0	0	0	0	0	0	0	0
0.95	0.03	0.03	0.02	0	0	0	0	0	0	0	0	0	0	0

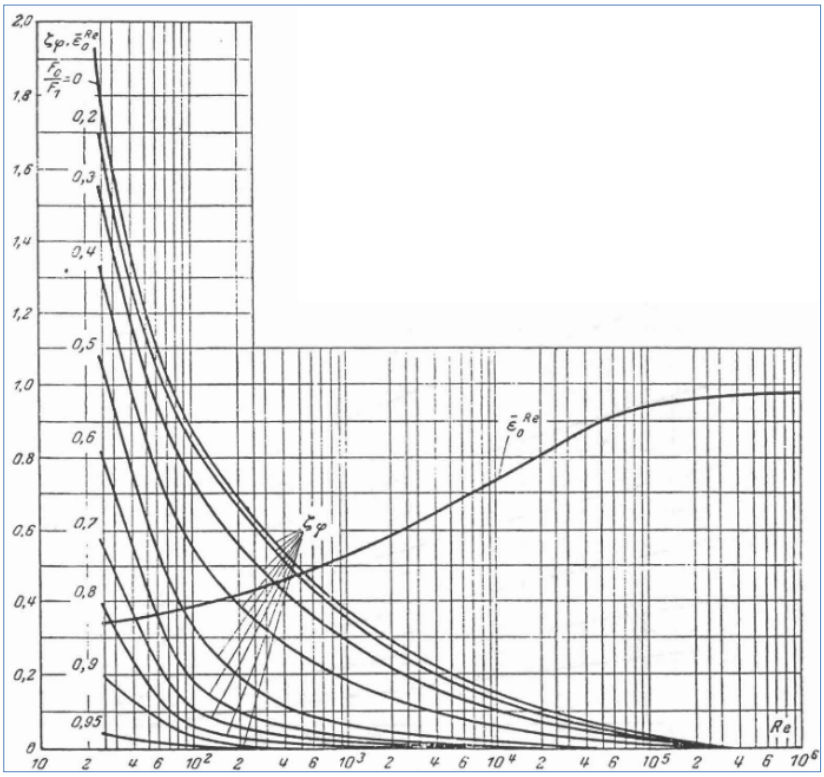

Figure 2.6: Chapter IV – Diagram 4.10 from I. E. Idelchik's Handbook of Hydraulic Resistance.

COPY COMPLIANT to the original document resident on the computer system at the time of printing

3. ACCEPTANCE CRITERIA

In general, the methods reported in the previous sections are applicable for orifice plates designs shown in *Figure 2.3* and *Figure 2.4*. For different geometries, the calculated data shall be considered not accurate.

3.1. ISO 5167-2.

The calculation as per ISO 5167-2 is acceptable if the data meet the limits of use, indicated in Section 5.3.1:

1) For orifice plates with corner or with D and D/2 pressure tappings:
   a. Orifice diameter: $d \geq 12.5mm$.
   b. Piping internal diameter: $50mm \leq D \leq 1000mm$.
   c. Diameter ratio: $0.1 \leq \beta \leq 0.75$.
   d. Reynolds number: $Re_D \geq 5000\ for\ 0.1 \leq \beta \leq 0.56$ and $Re_D \geq 16000\ for\ \beta > 0.56$.
2) For orifice plates with flange tappings:
   a. Orifice diameter: $d \geq 12.5mm$.
   b. Piping internal diameter: $50mm \leq D \leq 1000mm$.
   c. Diameter ratio: $0.1 \leq \beta \leq 0.75$.
   d. Reynolds number: $Re_D \geq 5000$ and $Re_D \geq 170\beta^2 D$.

3.2. Idelchik's method.

The calculation as per Chapter IV – Diagram 4.14 from I. E. Idelchik's Handbook of Hydraulic Resistance is acceptable if the ratio between the orifice plate length and the diameter meets the following requirement:

$$\frac{l}{D_0} > 0.015$$

4. REFERENCES

Handbook of Hydraulic Resistance, I. E. Idelchik, 1966

ISO 5167-2, Measurement of fluid flow by means of pressure differential devices Part 2: Orifice plates

***Mod.547** – Restriction orifice calculation*

COPY COMPLIANT to the original document resident on the computer system at the time of printing

5. APPENDIX

5.1. Calculation Tool

The following instructions shall be considered to carry out the calculation by means of the dedicated tool **Mod.547**:

1) Select which data shall be calculated (flowrate or pressure drop).
2) Fill in the input data (*Figure 5.1*).
3) Check if the input data meet the limits of use (refer to the warnings' legend as per *Figure 5.3*). If not, the solution cannot be considered acceptable.
4) Check the results.

A dedicated spreadsheet is available for the calculation methods as per previous sections.

PIPE AND ORIFICE DATA		
result	pressure drop	Result to be calculated
$D_{orifice}$ [mm]	5.000	Orifice diameter
$t_{orifice}$ [mm]	7.500	Piping thickness
type	ASTM	Piping type
D_N [inch]	1"	Piping nominal diameter
Sch [-]	XS	Piping schedule
D_{ext} [mm]	33.400	Piping internal diameter
D_{int} [mm]	24.300	Piping internal diameter
t_{pipe} [mm]	4.550	Piping thickness
ε [mm]	0.350	Surface roughness
FLUID DATA		
ρ [kg/m³]	1000	Fluid density
ν [mm²/s]	1.000	Fluid kinematic viscosity

Figure 5.1: Typical input data for calculation.

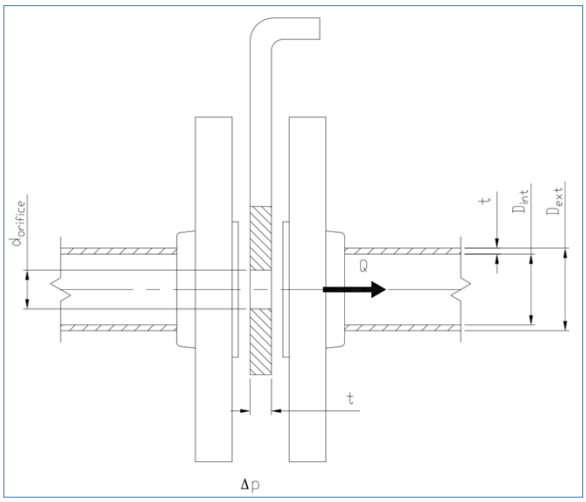

Figure 5.2: Typical drawing of restriction orifice plate.

COPY COMPLIANT to the original document resident on the computer system at the time of printing

Warnings legend	
✓	= Acceptable data.
✗	= Not acceptable data. User shall modify input data to find an acceptable solution.

Figure 5.3: Warnings' legend.

5.2. Case study 23C047 – Item 086974.

During the internal performance test on the pump, the fluid flowrate and pressure drop across the restriction orifice plate were measured. The operating conditions were the following:

- Piping: DN 2-1/2'' Sch. 80.
- Orifice plate: diameter 23.5 mm, thickness 20 mm.
- Fluid: water (density 1000 kg/m^3).

The comparison between test data and results as per the previously mentioned methods is reported in Table 5.1.

Table 5.1: Comparison between test data and calculated data with both ISO 5167-2 and Idelchik methods.

			test	ISO 5167-2		Idelchik	
flow [m^3/h]	barg	barg	Δp [bar]	Δp [bar]	error [%]	Δp [bar]	error [%]
9.3	1.8	2	0.2	0.473	136.60 %	0.254	27.10%
15.3	1.6	2.2	0.6	1.283	113.84 %	0.688	14.60%
21.3	1.6	2.8	1.2	2.489	107.42 %	1.332	11.01%
26.5	1.7	3.8	2.1	3.855	83.56%	2.062	-1.83%
26.8	1.5	3.7	2.2	3.943	79.21%	2.109	-4.16%
31.5	1.6	5.7	4.1	5.449	32.90%	2.913	-28.96%
37.4	1.5	8.7	7.2	7.684	6.72%	4.105	-42.98%

COPY COMPLIANT to the original document resident on the computer system at the time of printing

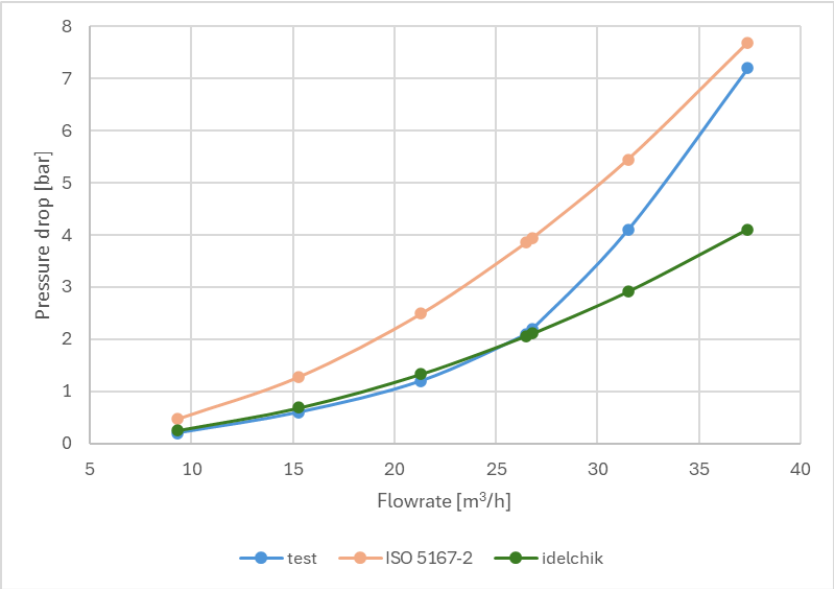

Figure 5.4: Pressure drop across orifice: test and calculated data.

COPY COMPLIANT to the original document resident on the computer system at the time of printing